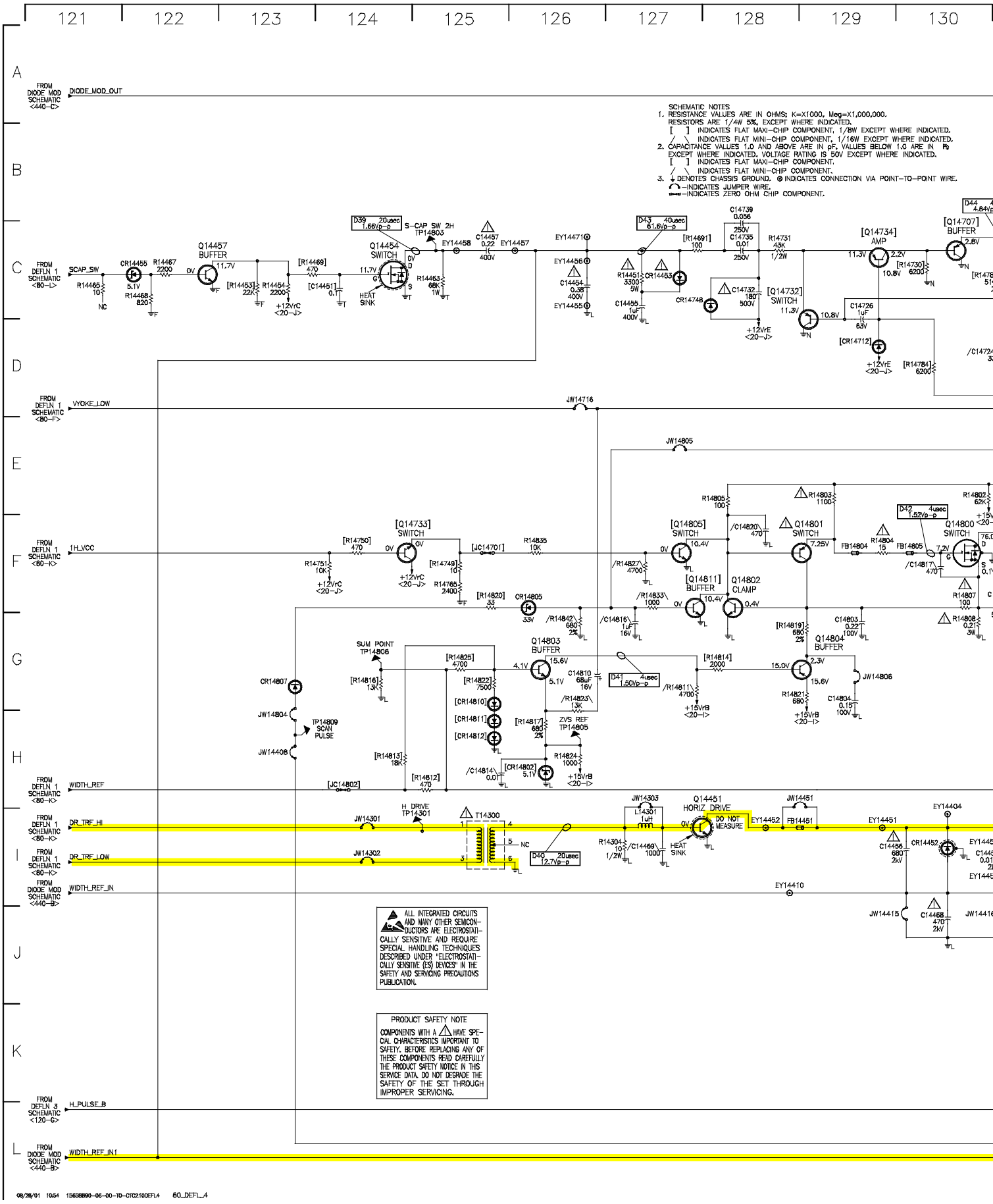
121
122
123
124
125
126
127
128
129
130
A
B
C
D
E
F
G
H
I
J
K
L
FROM DIODE MOD SCHEMATIC <440-C>
DIODE_MOD_OUT
SCHEMATIC NOTES
1. RESISTANCE VALUES ARE IN OHMS; K=X1000, Meg=X1,000,000.
RESISTORS ARE 1/4W 5%, EXCEPT WHERE INDICATED.
[ ] INDICATES FLAT MAXI-CHIP COMPONENT, 1/8W EXCEPT WHERE INDICATED.
/ \ INDICATES FLAT MINI-CHIP COMPONENT, 1/16W EXCEPT WHERE INDICATED.
2. CAPACITANCE VALUES 1.0 AND ABOVE ARE IN pF, VALUES BELOW 1.0 ARE IN Fg
EXCEPT WHERE INDICATED. VOLTAGE RATING IS 50V EXCEPT WHERE INDICATED.
[ ] INDICATES FLAT MAXI-CHIP COMPONENT.
/ \ INDICATES FLAT MINI-CHIP COMPONENT.
3. DENOTES CHASSIS GROUND. INDICATES CONNECTION VIA POINT-TO-POINT WIRE.
—INDICATES JUMPER WIRE.
—INDICATES ZERO OHM CHIP COMPONENT.
FROM DEFLN 1 SCHEMATIC <80-L>
SCAP_SW
Q14457 BUFFER
Q14454 SWITCH
S-CAP SW 2H TP14803
D39 20usec 1.66Vp-p
D43 40usec 61.6Vp-p
Q14734 AMP
Q14707 BUFFER
Q14732 SWITCH
FROM DEFLN 1 SCHEMATIC <80-F>
VYOKE_LOW
JW14716
JW14805
FROM DEFLN 1 SCHEMATIC <80-K>
1H_VCC
Q14733 SWITCH
Q14805 SWITCH
Q14801 SWITCH
Q14800 SWITCH
D42 4usec 1.52Vp-p
Q14811 BUFFER
Q14802 CLAMP
Q14803 BUFFER
Q14804 BUFFER
SUM POINT TP14806
TP14809 SCAN PULSE
ZVS REF TP14805
D41 4usec 1.50Vp-p
JW14806
FROM DEFLN 1 SCHEMATIC <80-K>
WIDTH_REF
FROM DEFLN 1 SCHEMATIC <80-K>
DR_TRF_HI
FROM DEFLN 1 SCHEMATIC <80-K>
DR_TRF_LOW
FROM DIODE MOD SCHEMATIC <440-B>
WIDTH_REF_IN
H DRIVE TP14301
T14300
Q14451 HORIZ DRIVE
DO NOT MEASURE
D40 20usec 12.7Vp-p
EY14404
EY14410
ALL INTEGRATED CIRCUITS AND MANY OTHER SEMICONDUCTORS ARE ELECTROSTATICALLY SENSITIVE AND REQUIRE SPECIAL HANDLING TECHNIQUES DESCRIBED UNDER "ELECTROSTATICALLY SENSITIVE (ES) DEVICES" IN THE SAFETY AND SERVICING PRECAUTIONS PUBLICATION.
PRODUCT SAFETY NOTE
COMPONENTS WITH A ⚠ HAVE SPECIAL CHARACTERISTICS IMPORTANT TO SAFETY. BEFORE REPLACING ANY OF THESE COMPONENTS READ CAREFULLY THE PRODUCT SAFETY NOTICE IN THIS SERVICE DATA. DO NOT DEGRADE THE SAFETY OF THE SET THROUGH IMPROPER SERVICING.
FROM DEFLN 3 SCHEMATIC <120-G>
H_PULSE_B
FROM DIODE MOD SCHEMATIC <440-B>
WIDTH_REF_IN1
08/28/01 10:54 15658890-06-00-TO-CTC210DEFL4 60_DEFL_4

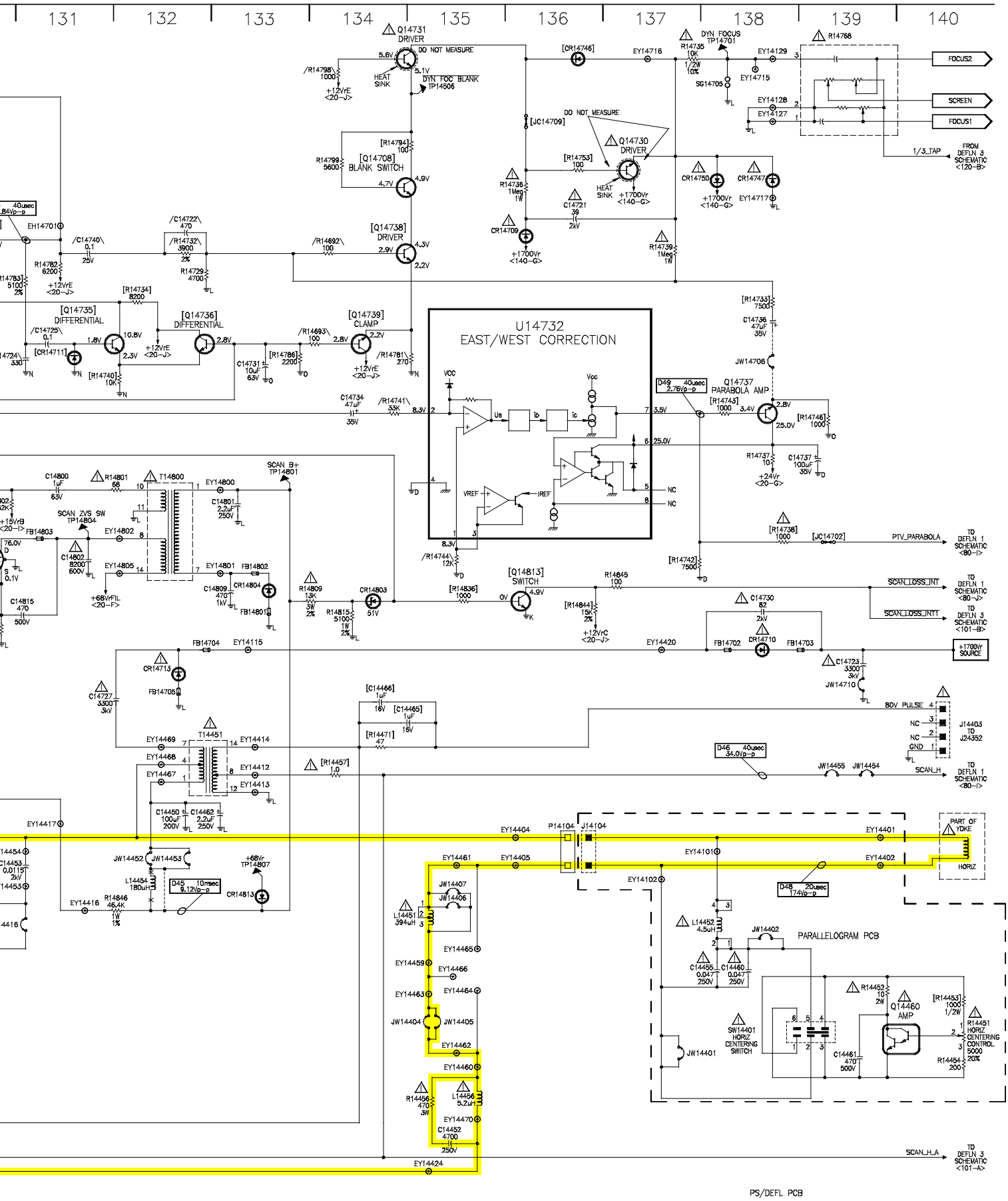
131
132
133
134
135
136
137
138
139
140
Q14731 DRIVER
DO NOT MEASURE
DYN FOC BLANK TP14506
HEAT SINK
[Q14708] BLANK SWITCH
[Q14738] DRIVER
[Q14735] DIFFERENTIAL
[Q14736] DIFFERENTIAL
[Q14739] CLAMP
U14732 EAST/WEST CORRECTION
Q14737 PARABOLA AMP
[Q14813] SWITCH
Q14730 DRIVER
DYN FOCUS TP14701
FOCUS2
SCREEN
FOCUS1
1/3_TAP
FROM DEFLN 3 SCHEMATIC <120-B>
PTV_PARABOLA
TO DEFLN 1 SCHEMATIC <80-I>
SCAN_LOSS_INT
TO DEFLN 3 SCHEMATIC <101-B>
+1700Vr SOURCE
80V PULSE
J14403 TO J24352
SCAN_H
PARALLELOGRAM PCB
PART OF YOKE
HORIZ
SW14401 HORIZ CENTERING SWITCH
R14451 HORIZ CENTERING CONTROL 5000 20%
SCAN_H_A
TO DEFLN 3 SCHEMATIC <101-A>
PS/DEFL PCB